10.51216.413
EGO HiLight pat.US 5393958
2000/1000W
240V~ **

color assignment/Farbzuordnung
230V without/ohne
240V blue/blau
400V red/rot

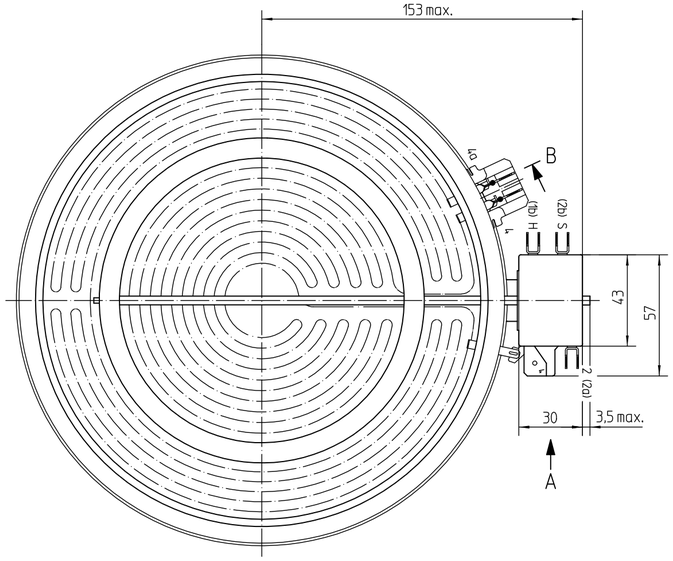

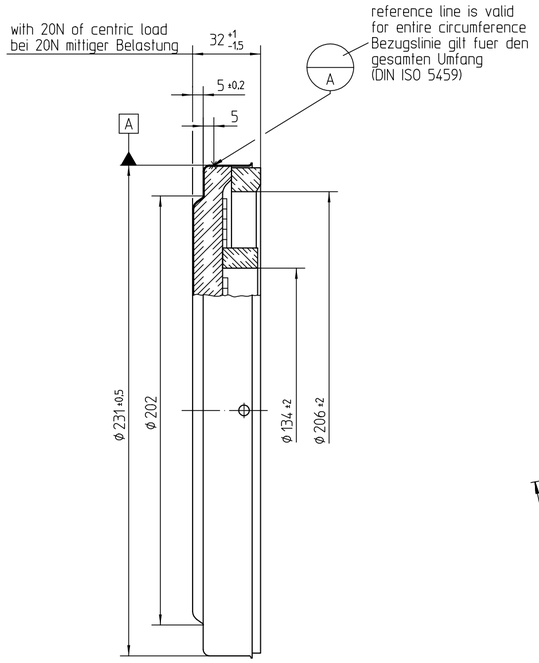

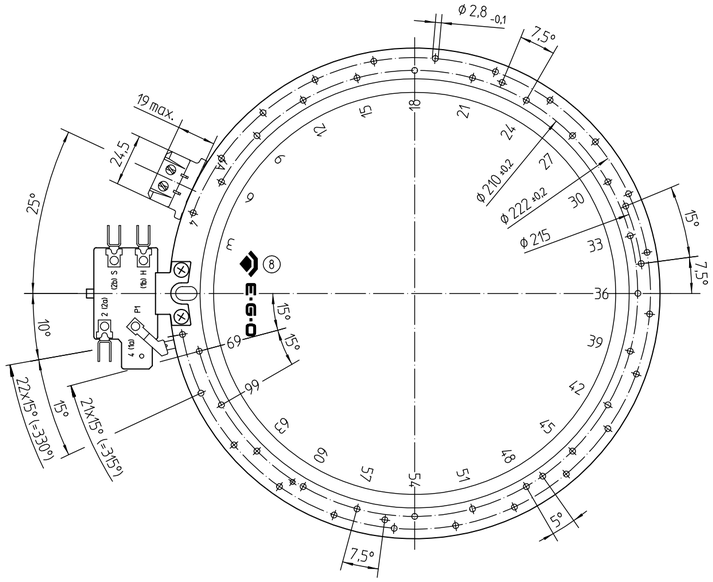

secure only by the spring embossed edge max. screw in deep 6mm (2)
thread end ISO 1478-form C
Nur an der Randeinpraegung federnd niederhalten
max. Einschraubtiefe 6mm
Gewindeende ISO 1478-Form C

(4) Limiter/Begrenzer
60.25173.040
(7) max. permissible temperature at housing 250°C
max. zulaessige Temperatur am Gehaeuse 250°C

adjustment/Justierung:
glass surface temperature [$\bar{T}_0$]
Hightrans eco
Glasoberflaechentemperatur [$\bar{T}_0$]
Hightrans eco
2 (2a) - 4/4a 580°C
S (2b) - H (1b) out/Aus 65°C

support at inserting resp. pull off avoids possible damage at the temperature control
Abstuetzen beim Stecken bzw. Abziehen vermeidet evtl. Beschaedigungen am Temperaturwaechter

A(1:1,5)

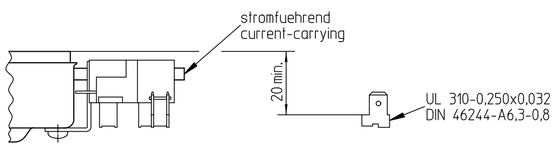

B(1:1,5)

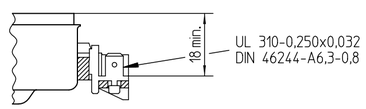

wiring diagram/Schaltschema

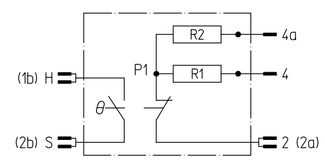

Pos	type Type	W wattage Leistung	V~ voltage Spannung	R1 rated conductor Heizleiterabstufung	R2				patent no. Patent-Nr.	approval marks Pruefzeichen**		
9												
8	10.51216.418	2400	240	1100	1300				pat.US 5393958	X	X	(5)
7	(2)											
6	10.51216.416	2200	400	1000	1200							(1)
5	10.51216.415	2400	208	1100	1300				pat.US 5393958	X	X	(3)
4	10.51216.414	2200	230	1000	1200					X		(1)
3	(2)											
2	10.51216.412	2000	230	1000	1000					X		
1	10.51216.411	2000	400	1000	1000					X		
0												

tolerance/Tolerierung DIN 7167

9	B02561	2011-07-29			
8	B02501	2011-04-11			
7	B02509	2011-03-31			
6	CD0001	2010-12-15			
5	B02405	2010-08-17			
4	B02181	2009-11-16	CAD	Date	Name
3	B02040	2009-02-13	Create.	2005-08-25	FUERSTA
Cha.	Information No.	Date	Proc.	2011-07-29	REIMOLDS
F.Rel.	B01203	2005-08-25	Rel.	2011-07-29	REIMOLDS

This document is exclusively committed to you for the agreed purpose. Any kind of duplication, utilization or communication of its content is prohibited, if not expressly conceded otherwise. Violators are committed to pay compensations. Any claims of existing or future property rights remain unaffected.

Blank No. . EN Mat.No. .
Material .
Surface Texture ISO 1302
General Tolerances ISO 2768-mH-E
Scale Unit mm
Scale 1:2

Designation
EGO HiLight 210/140
EGO HiLight 210/140
.

E·G·O

Drawing No. 10.51216.41X | Sh.No. 901 | Ver. 8 | Stat. F | Sheets . | Doc. . | Ex.Doc. .

Origin . | Repl.for 10.51216.41X/001 | Repl.by . | Ref. .

erstellt am 2011-07-29 15:55:40 von REIMOLDS

Printout not true to Scale